UNIVERSITY OF SOUTH CAROLINA

ITEC 493: IT Security for Managers

Basic Cryptography

Ali Mazloum
Integrated Information Technology Department
College of Engineering and Computing
University of South Carolina

Fall 2025

Objectives

- Define cryptography
- Describe hash, symmetric, and asymmetric cryptographic algorithms
- List the various ways in which cryptography is used

Introduction

Security problems can be roughly divided into:

- **Operational security**: prevent unauthorized access, worms, DoS. ACLs, firewalls, IPSs, and IDSs are used to counter attacks.
- **Confidentiality**: only sender and receiver should understand the contents of message. Encryption typically used.
- **Integrity**: communication content must not be altered (maliciously or by accident). Hash functions used for integrity control.
- **Authentication**: sender and receiver should confirm identity of the other party. Pre-shared key and digital signatures.

Introduction

- For high-value data that must be fully protected second level of protection also should be used: *encryption*
- If attackers penetrate the host and reach data, they still must uncover key to unlock encrypted contents: a virtually impossible task (if encryptions are properly applied)
- As more data taken off-premises it becomes increasingly important to use encryption

Defining Cryptography

- Science of transforming information into secure form so that unauthorized persons cannot access it

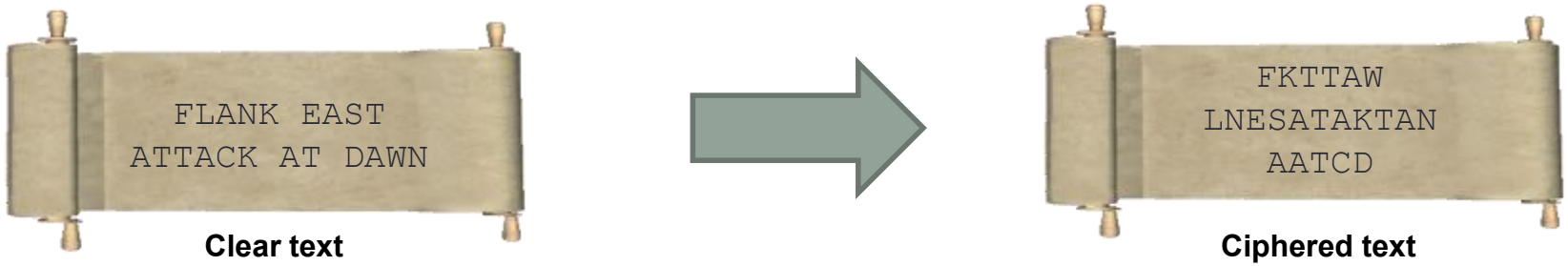

Cryptography Terminology

- Encryption
  Changing original text into secret message using cryptography
- Decryption
  Changing secret message back to original form
- Cleartext
  Data in unencrypted form
- Plaintext
  Cleartext data to be encrypted
- Ciphertext
  Data that has been encrypted
- Key
  Input entered to produce encrypted data

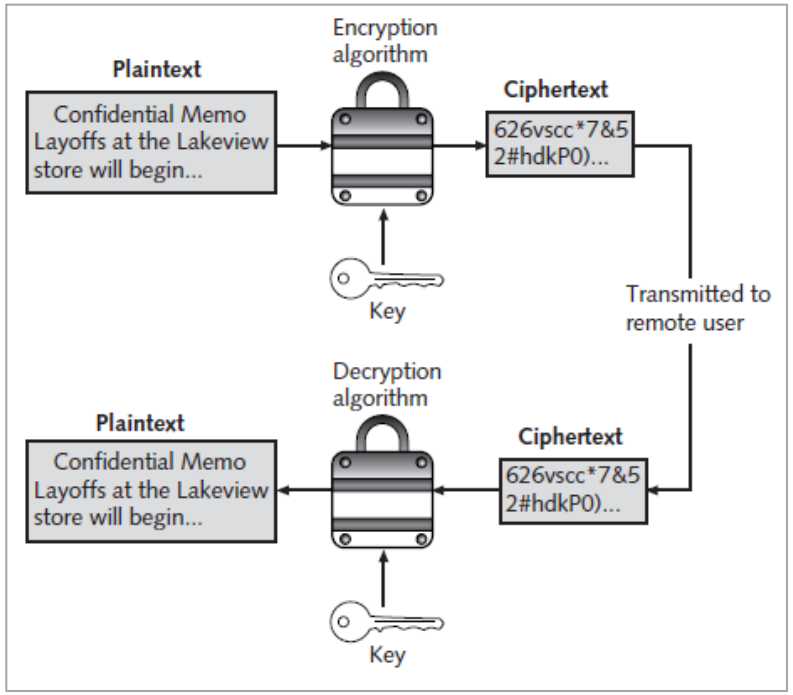

Cryptography and Security

- Cryptography can provide five basic information protections

Characteristic	Description	Protection
Confidentiality	Ensures that only authorized parties can view the information	Encrypted information can only be viewed by those who have been provided the key.
Integrity	Ensures that the information is correct and no unauthorized person or malicious software has altered that data	Encrypted information cannot be changed except by authorized users who have the key.
Availability	Ensures that data is accessible to authorized users	Authorized users are provided the decryption key to access the information.
Authentication	Provides proof of the genuineness of the user	Proof that the sender was legitimate and not an imposter can be obtained.
Non-repudiation	Proves that a user performed an action	Individuals are prevented from fraudulently denying that they were involved in a transaction.

Cryptography and Security

- A fundamental difference in cryptographic algorithms is the amount of data processed at a time:
  - **Stream cipher**: Takes and replaces one character at a time
  - **Block cipher:** Manipulates entire block of plaintext at one time

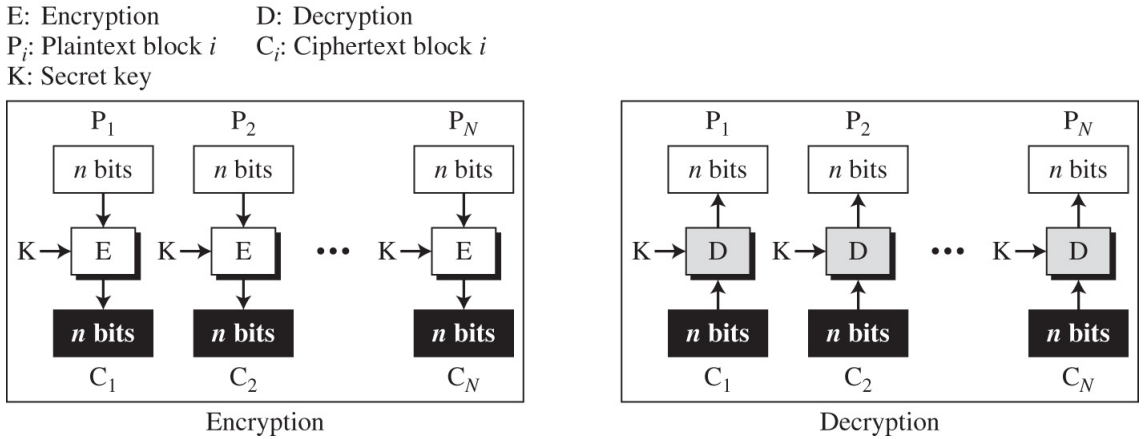

Block cipher

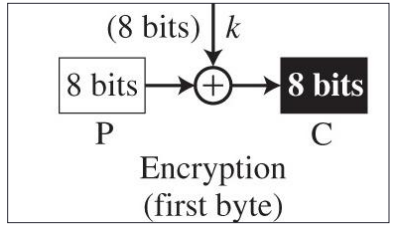

Stream cipher

Cryptographic Algorithms

- Hash algorithms
- Symmetric encryption algorithms
- Asymmetric encryption algorithms

Hash Algorithms

- Hash algorithm creates a unique digital fingerprint
- Used for integrity, authentication
- Fingerprint called *digest* (*message digest* or simply *hash*)
- One-way function
- Primarily used for comparison purposes

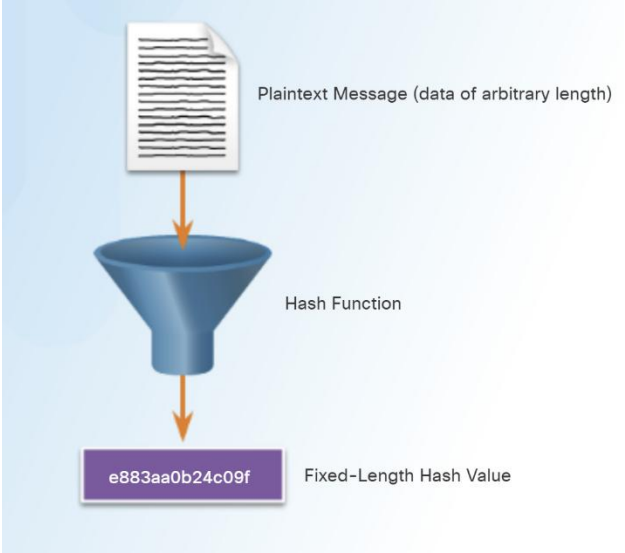

Hash Algorithms

- Secure hashing algorithm characteristics:
  - Fixed size - Short and long data sets have the same size hash
  - Unique - Two different data sets cannot produce the same hash (collision-free)
  - Secure - Resulting hash cannot be reversed to determine original plaintext (one-way)
  - Original - Dataset cannot be created to have a predefined hash
  - Easy-to-compute fingerprint, computationally cheap

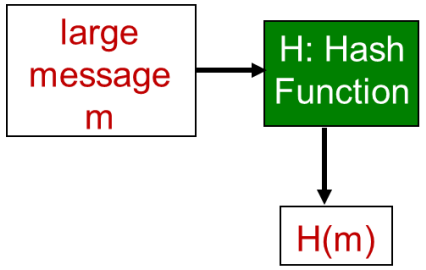

Secure Hash Algorithms

- Checking integrity

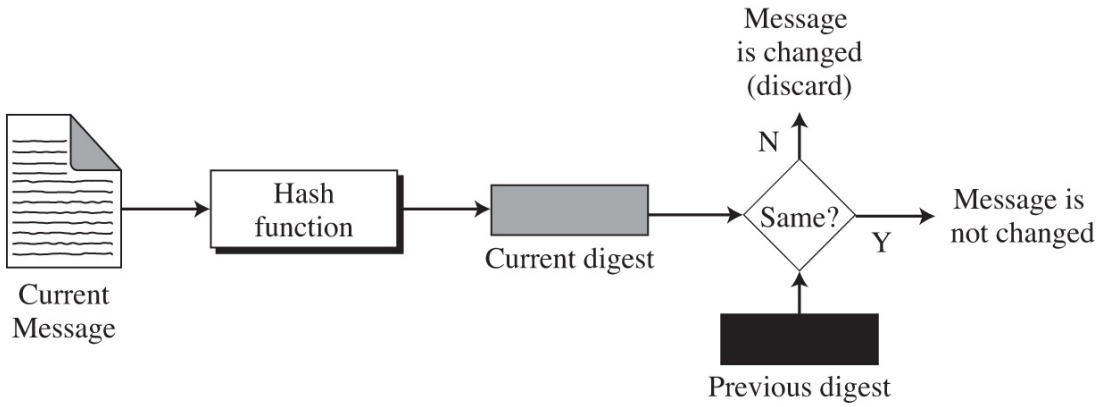

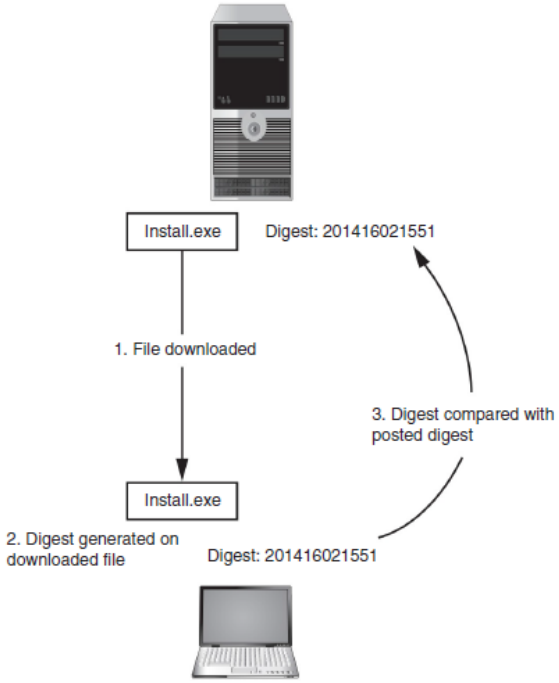

Hashed Message Authentication Code (HMAC)

- Hash variation providing improved security
  - Uses secret key possessed by sender and receiver
  - Receiver uses key to verify the data origin authenticity

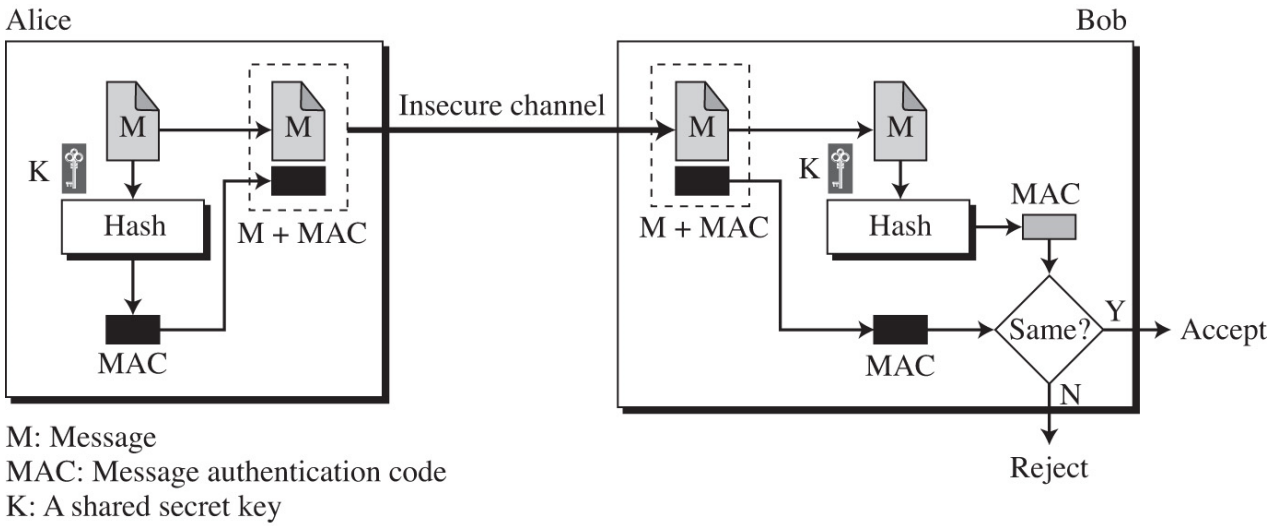

Common Hash Algorithms

- Most common hash algorithms:
  - Message Digest
  - Secure Hash Algorithm
  - Whirlpool
  - RIPEMD

Message Digest (MD)

- One of most common hash algorithms
- MD2
  - Takes plaintext of any length and creates 128 bit hash
  - Padding added to make short messages 128 bits
  - No longer considered secure
- MD4
  - Has flaws and was not widely accepted
- MD5
  - Designed to address MD4's weaknesses
  - 128-bit digest
  - Weaknesses in compression function could lead to collisions
  - If available, it is recommend to use a more secure hash algorithm

Secure Hash Algorithm (SHA)

- SHA-1
  - Developed in 1993 after MD4 and MD5; 160-bit digest
  - Considered to be a legacy algorithm
- SHA-2
  - A family of hash functions published in 2001 by the National Institute of Standards and Technology (NIST)
  - SHA-224 (224 bit)
  - SHA-256 (256 bit)
  - SHA-384 (384 bit)
  - SHA-512 (512 bit)
- SHA-256 or higher is highly recommended for production systems

Other Hash Algorithms

- Whirlpool
  - Recent cryptographic hash
  - Adopted by standards organizations
  - Creates hash of 512 bits
- Race Integrity Primitives Evaluation Message Digest (RIPEMD)
  - Two different and parallel chains of computation
  - Results are combined at end of process

Digests Generated From One-time Hash

Hash	Digest
MD2	c4b4c4568a42895c68e5d507d7f0a6ca
MD4	9a5b5cec21dd77d611e04e10f902e283
MD5	0e41799d87f1179c1b8c38c318132236
RipeMD160	d4ec909f7b0f7dfb6fa45c4c91a92962649001ef
SHA-1	299b20adfec43b1e8fade03c0e0c61fc51b55420
SHA-256	133380e0ebfc19e91589c2feaa346d3e679a7529fa8d03617fcd661c997d7287
Whirlpool	1db4f64211028432d31ec9f0201244d59c11ff04dcf5c3dc97cc4cef700ad0c20d1943853202 20038ae9680da453f64d0062b09eabd8a157ebe147cd9233dd1d
SHA-3	c298d1ec129b04495f399cbc5c44b8023e213ebe27b78f689046a72e436e0e0 1d47302bbc8a857695594106d63571b95933a6 7b389802ceb2ef9b078297cfcc3

How One-Way Hash Algorithm Works

- Construction method called Merkle–Damgard
- Used by algorithms like MD5, SHA-1, and SHA-2

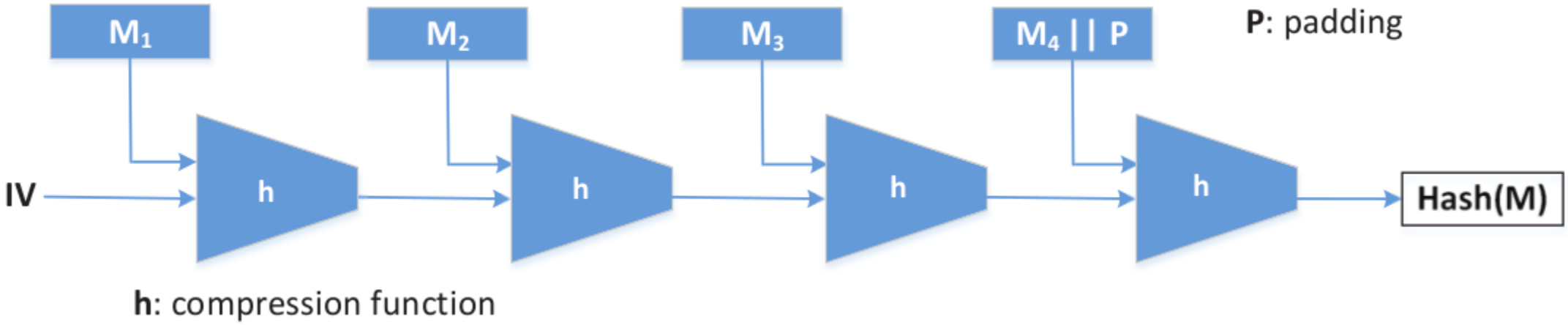

One-Way Hash Commands

- Linux utility programs
- Example: md5sum, sha224sum, sha256sum, sha384sum and sha512sum

```
$ md5sum file.c
919302e20d3885da126e06ca4cec8e8b   file.c

$ sha256sum file.c
0b2a06a29688...(omitted)...1f04ed41d1   file.c
```

Integrity Verification

- Changing one bit of the original data changes hash value

```
$ echo -n "Hello World" | sha256sum
a591a6d40bf420404a011733cfb7b190d62c65bf0bcda32b57b277d9ad9f146e

$ echo -n "Hallo World" | sha256sum
d87774ec4a1052afb269355d6151cbd39946d3fe16716ff5bec4a7a631c6a7a8
```

- Usage examples:
  - Detect change in system files
  - Detect if file downloaded from website is corrupted

Demo MD5 Attack

```
[02/10/22]seed@VM:~$ echo "Some initial text" > prefix.txt
[02/10/22]seed@VM:~$ md5collgen -p prefix.txt -o out1.bin out2.bin
MD5 collision generator v1.5
by Marc Stevens (http://www.win.tue.nl/hashclash/)

Using output filenames: 'out1.bin' and 'out2.bin'
Using prefixfile: 'prefix.txt'
Using initial value: e63099cdb96ee59e36c1e83cf7a5b3d4

Generating first block: ......
Generating second block: S11.......................
Running time: 8.12633 s
[02/10/22]seed@VM:~$ diff out1.bin out2.bin
Binary files out1.bin and out2.bin differ
[02/10/22]seed@VM:~$ md5sum out1.bin out2.bin
20117a639471abce630a6bd0d43fd9ec  out1.bin
20117a639471abce630a6bd0d43fd9ec  out2.bin
[02/10/22]seed@VM:~$ sha256sum out1.bin out2.bin
6096c584989f36ebe17771aeceead5403f2c0056b5d53d03244d995c62d89fea  out1.bin
6aceee0e883942ec83e478da244281872ae2a2bdeb5a6d011d2ba3d61801fa8f  out2.bin
[02/10/22]seed@VM:~$
```

Symmetric (Private Key) Cryptography

- Used for encryption (confidentiality)
- Plaintext is encrypted with the shared key
- Ciphertext is sent through the channel
- Ciphertext is decrypted with the same secret key
- Locking and unlocking with the same key

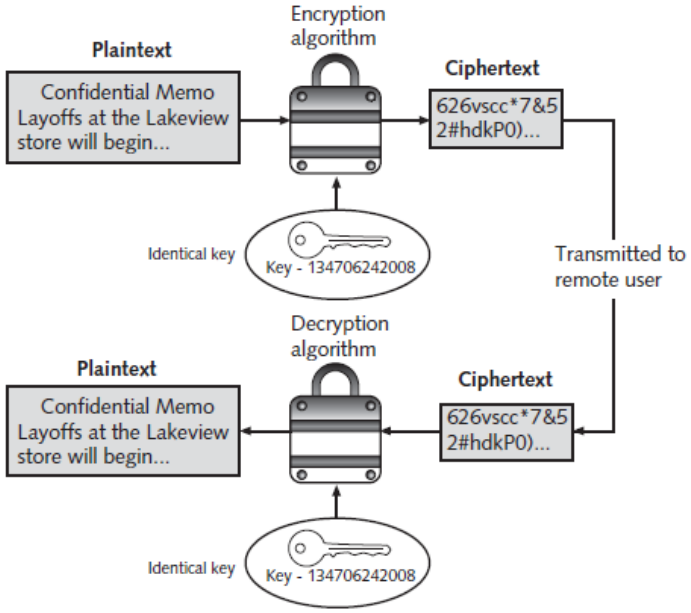

Kerckhoff's Principle

- One should always assume that the adversary knows the encryption/decryption algorithm
- The resistance of the cipher to attack must be based only on the secrecy of the key

Symmetric Key Algorithms

- DES
- 3DES
- AES
- RC4

Data Encryption Standard (DES)

- One of first algorithms; widely popular
- Predecessor of DES was product originally designed early 1970s by IBM, called Lucifer (128-bit key length)
- Key was later shortened to 56 bits and renamed DES
- How secure is DES?
  - DES Challenge: 56-bit-key-encrypted phrase decrypted (brute force) in less than a day
- No known good analytic attack

Data Encryption Standard (DES)

- Initial permutation
- 16 identical “rounds” of function application, each using different 48 bits of key
- Final permutation

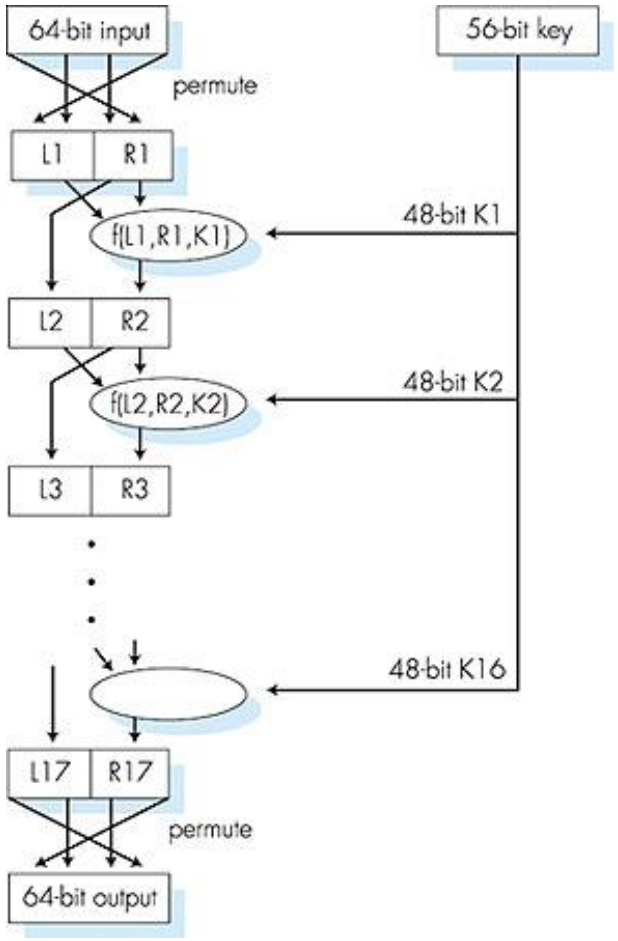

Triple Data Encryption Standard (3DES)

- Making DES more secure:
  - 3DES: encrypt 3 times with 3 different keys
- Designed to replace DES; three rounds of encryption
- Most secure versions use different keys per round
- Performs better in hardware than as software

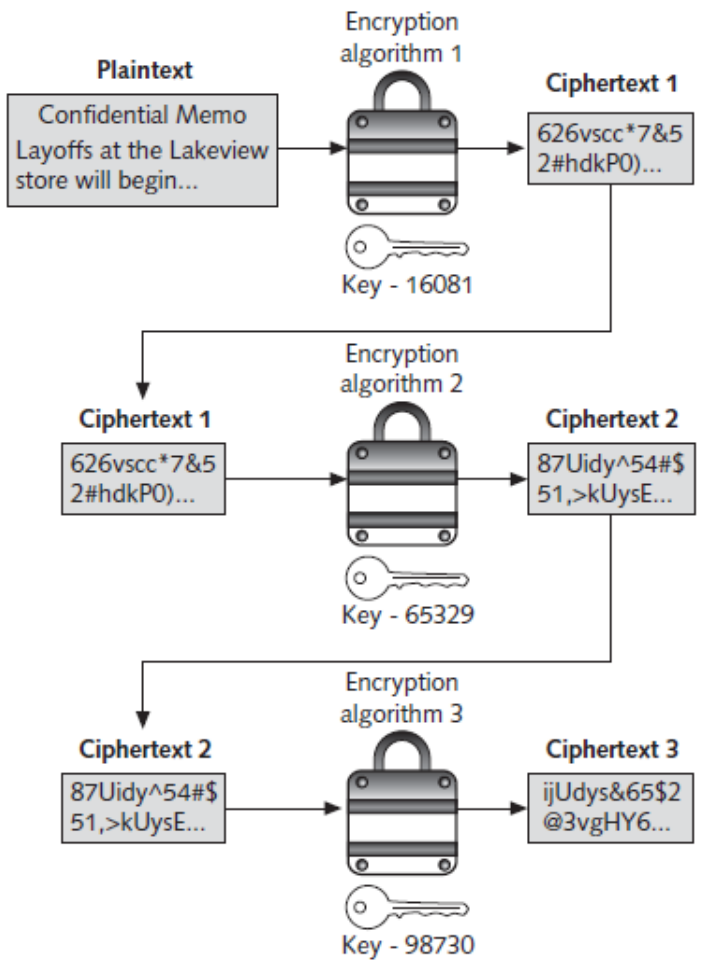

Advanced Encryption Standard (AES)

- Standard published by NIST in 2001
- Symmetric cipher approved as replacement for DES
- AES uses block of 128 bits of plaintext
- To date, no attacks have been successful against AES
- Options of key-length include 128, 192, and 256 bits
- Number of rounds vary based on key-length: 10, 12, or 14 rounds

NIST: National Institute of Standards and Technology

Other Symmetric Encryption Algorithms

- RC4

  Stream cipher that accepts keys up to 128 bits in length

- Blowfish

  Block cipher algorithm that operates on 64-bit blocks and can have a key length from 32 to 448 bits

- Twofish

  Derivation of Blowfish considered to be a strong algorithm, although has not been used as widely as Blowfish

Keyspace

- Adding one bit to a key doubles the keyspace
- For each bit added to the DES key, the attacker would require twice the amount of time to search the keyspace
- Longer keys are more secure but are also more resource intensive and can affect throughput

DES Key Length	Keyspace	# of Possible Keys
56 bit	2^{56}	72,000,000,000,000,000
57 bit	2^{57}	144,000,000,000,000,000
58 bit	2^{58}	288,000,000,000,000,000
59 bit	2^{59}	576,000,000,000,000,000

Encryption Modes

- Electronic Code Book (ECB)

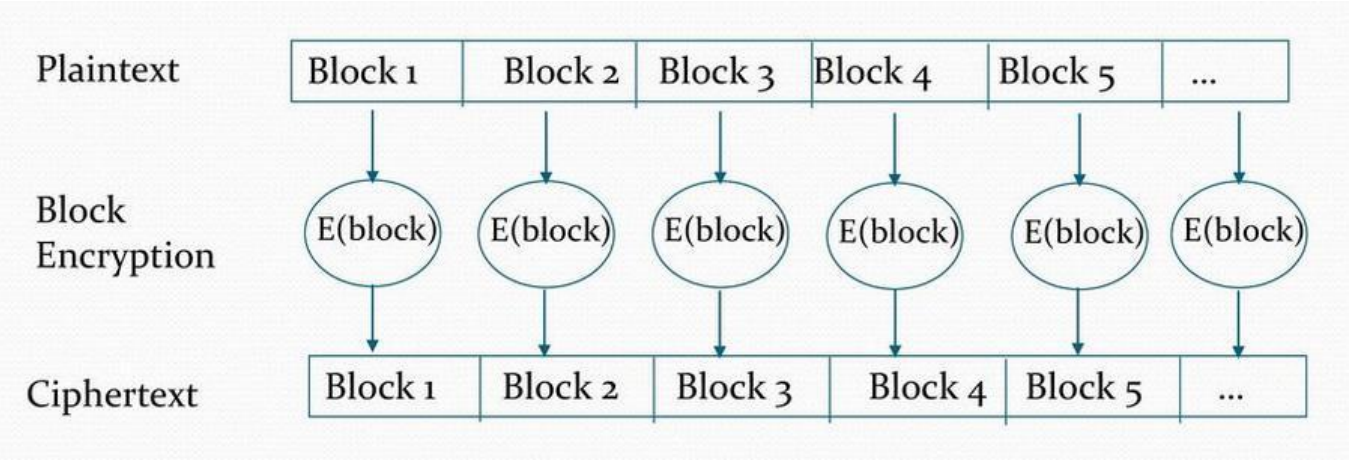
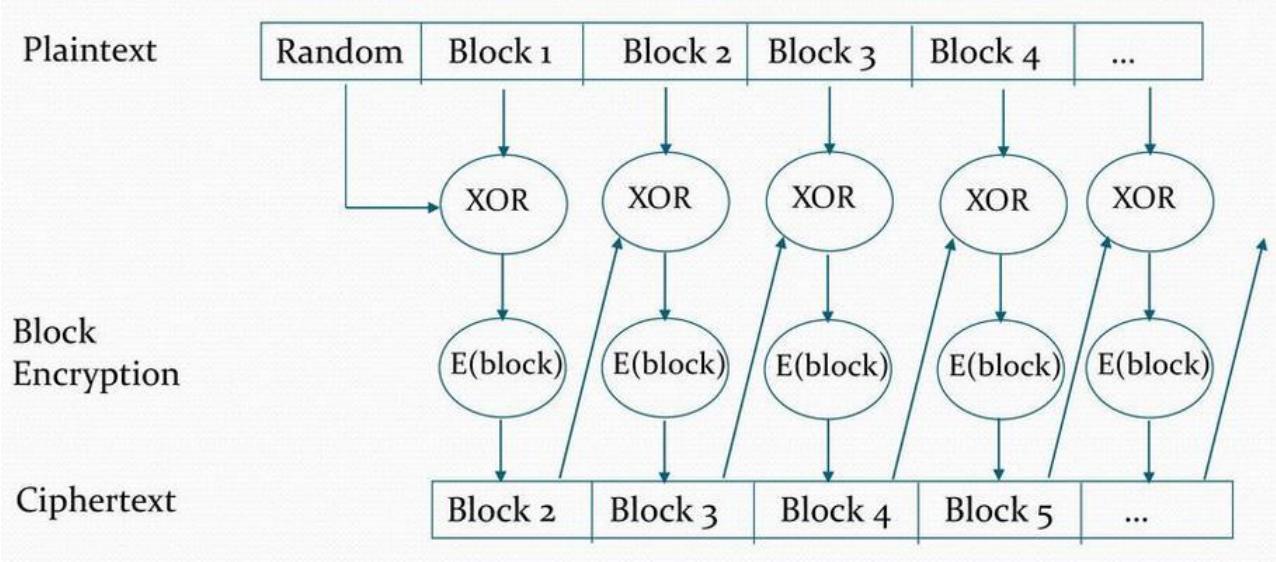
- Cipher Block Chaining (CBC)